Spare parts list

Ref: IDAF40827
Model: H.P. CLEANER PW-C85 D3515P T400/50 IPC

Table: OVERALL - IDAF40827 Progressive number: 1

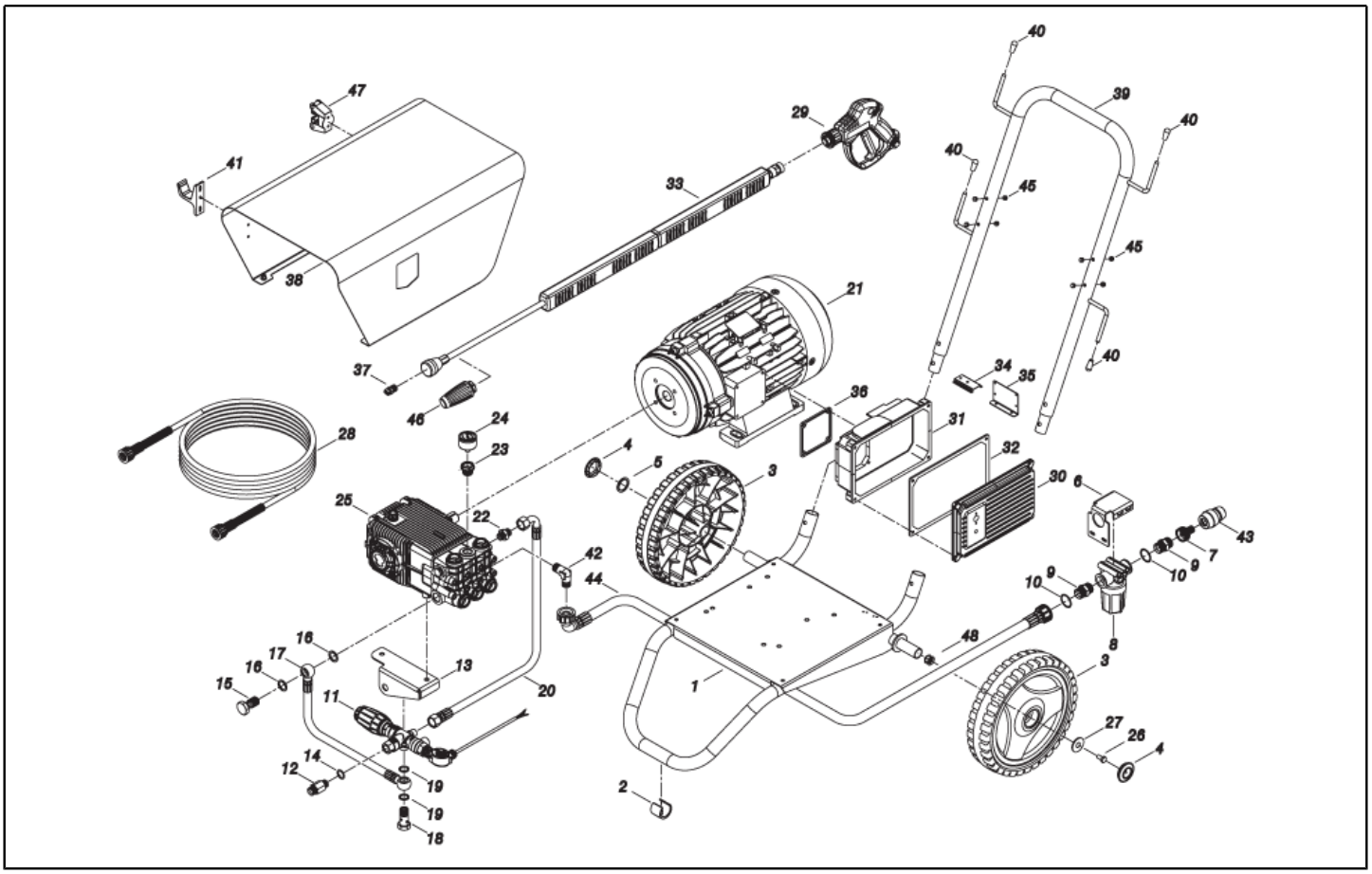

Ref. K	Part n.	Part n. 2	Description	Quantity	Validity From	Validity To	Price
0001	LAFN40848		TROLLEY PW-C85 12-15HP/Rt.F. GR.	1,00			--
0002	MPVR40787		FOOT D.28-30MM P.7.5MM	1,00			--
0003	RTRT40042		WHEEL D.300-D.25 FLY-IPC	2,00			--
0004	MPVR40782		HUB CAP D.50 G-48/IPC BK.	2,00			--
0005	VTRS09813		WASHER D.25	1,00			--
0006	LAFN40811		FILTER BRACKET PW-C85 10HP GR.	1,00			--
0007	RCVR29600		SOCKET PTC 3/4 F	1,00			--
0008	FTAC40015		WATER FILTER 3/4 FF 100MS 55L/1 TC	1,00			--
0009	RCVR40006		NIPPLE 3/4 - 3/4 D.18 L=60 PPL	2,00			--
0010	GUGO01043		O-RING D. 25.07 X 2.62 NBR 70SH	2,00			--
0011	VVAZ86903		VALVE VB 350 +PR 5	1,00			--
0012	RCIN40041		MALE COUPLING M 24 -3/8M INX RM	1,00			--
0013	LAFN40910		VALVE BRACKET PW-C85/IPC GR.	1,00			--
0014	VTRS00548		WASHER D.17,5X23X1,5 (3/8)RM	1,00			--
0015	RCDS16328		SCREW G 1/2 D.8	1,00			--
0016	VTRS00549		WASHER D.21,5X27X1.5 (1/2) RM	2,00			--
0017	TBAP40209		L.P. HOSE L=350 1/2OC -3/8Mc	1,00			--
0018	RCDS01371		SCREW G 3/8 A.P.	1,00		10/05/2016	--
0019	VTRS00548		WASHER D.17,5X23X1,5 (3/8)RM	2,00		10/05/2016	--
0020	TBAP40208		HOSE-FITTING 5/16 R2 L=315 3/8F -3/8F	1,00			--
0021	MOTR40061		3PH MOTOR B3-14 HP15 23/400-50 4P	1,00		19/11/2017	--
0021	MOTR40072		3PH MOTOR B3-14 HP15 23/400-50 4PE	1,00	20/11/2017		--
0022	RCDS00610		NIPPLE 3/8 - 3/8 SV	1,00			--
0023	PVVR40274		CAP AR SHP +1/4F	1,00			--
0024	MNMN40001		PRESSURE GAUGE 0-600 D.50 INOX	1,00			--
0025	PPAP40077		PUMP SXW 15.35 DX N OT.	1,00			--
0026	VTVT00447		SCREW TE 8X25 UNI5739	1,00			--
0027	VTRS00513		WASHER D. 8 X32 P.	1,00			--
0028	TBAP00029		H.P. HOSE R2 MT 10 5/16" 3/8 M-M	1,00			--
0028	RCIN12717		FEMALE COUPLIN. M24 - 3/8FB	2,00			--
0029	IPIP42787		GRIP RL 56 +AR M24 +3/8F SW.	1,00			--
0029	RCIN40041		MALE COUPLING M 24 -3/8M INX RM	1,00			--
0030	MEVR40186		BOX COVER PW-C85 ALL.	1,00			--
0031	MEVR40187		CONTROL BOX PW-C85 15Hp ALL.	1,00			--
0032	GUGO40068		GASKET COPERCH. H132 RV	1,00			--
0033	LCLC42786		LANCE L=105 S3 350B.IX-1/4+AR8A	1,00			--
0034	LAFN40829		SUPPORT L.60 PW-C85	1,00			--
0035	LAFN40828		BRACKET PW-C85 ZC.	1,00			--
0036	GUGO40067		GASKET H132 RV IP55	1,00			--
0037	UGLN40026		LANCE NOZZLE LECH 1/4 15035 500bar	1,00			--
0038	LAFN40814		COVERING PW-C85 12-15HP GR.	1,00			--
0039	LAFN40905		HANDLE PW-C85 12-15HP/IPC GR.	1,00			--
0040	MPVR32471		PROD D. 8 BK	4,00			--
0041	MPVR14947		LANCE REST NYL 66	1,00			--

Table: OVERALL - IDAF40827 Progressive number: 1

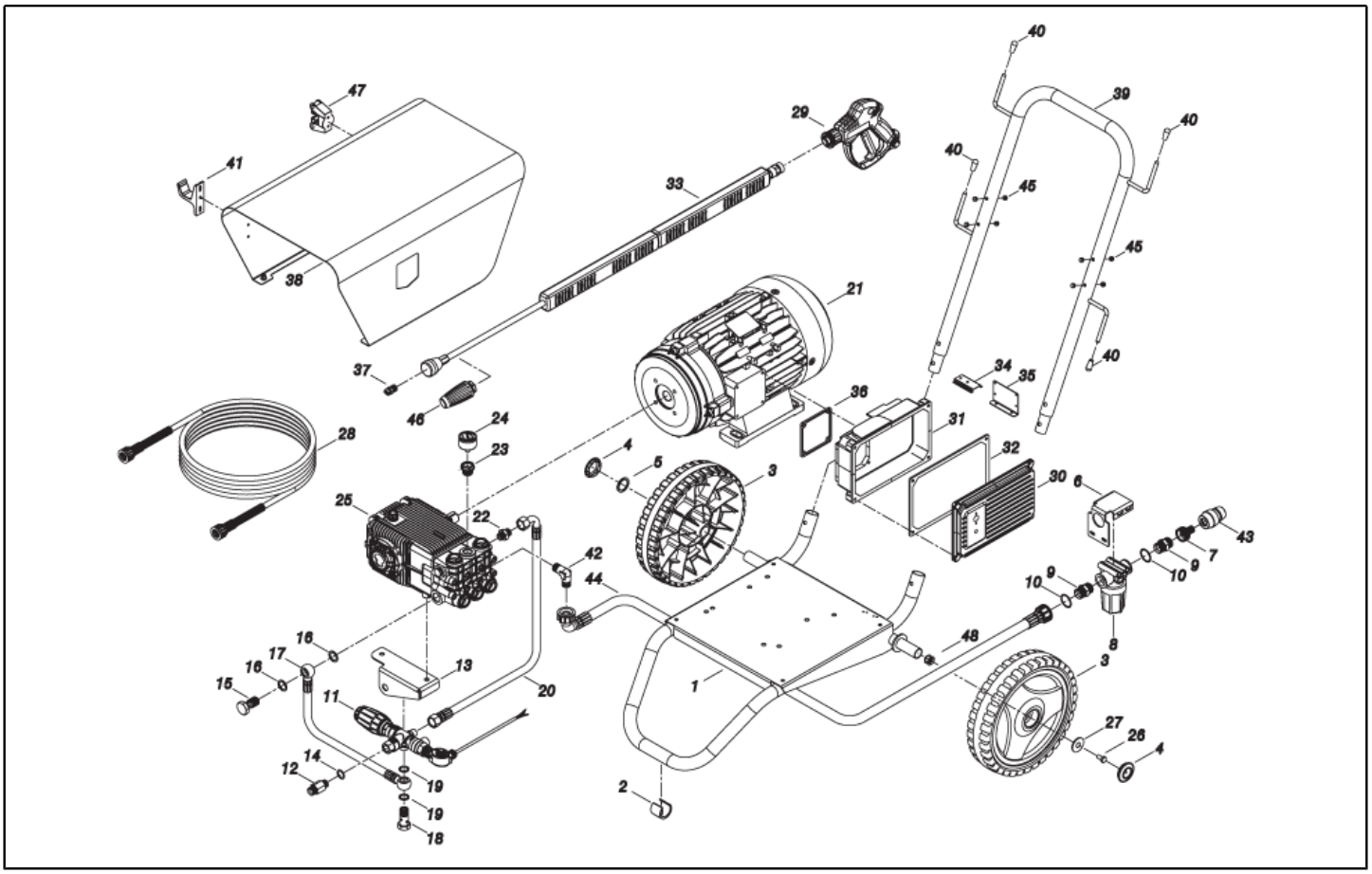

Ref. K	Part n.	Part n. 2	Description	Quantity	Validity From	To	Price
0042	RCVR40153		ELBOW 3/4"-1/2" M OT.	1,00			--
0043	RCVR29602		CONNECTOR D. 1/2"-5/8" PTC	1,00			--
0044	TBBP40102		L.P. HOSE L=365 3/4F 90° -3/4F 0°	1,00			--
0045	MPVR89160		PROD D. 7-15 L=15 BK.	8,00			--
0048	VTVR40056		INSERT M 8 CROWN-NUT IT-D.21.4	1,00			--

Table: ELECTRIC DIAGR. - IDAF40827 Progressive number: 2

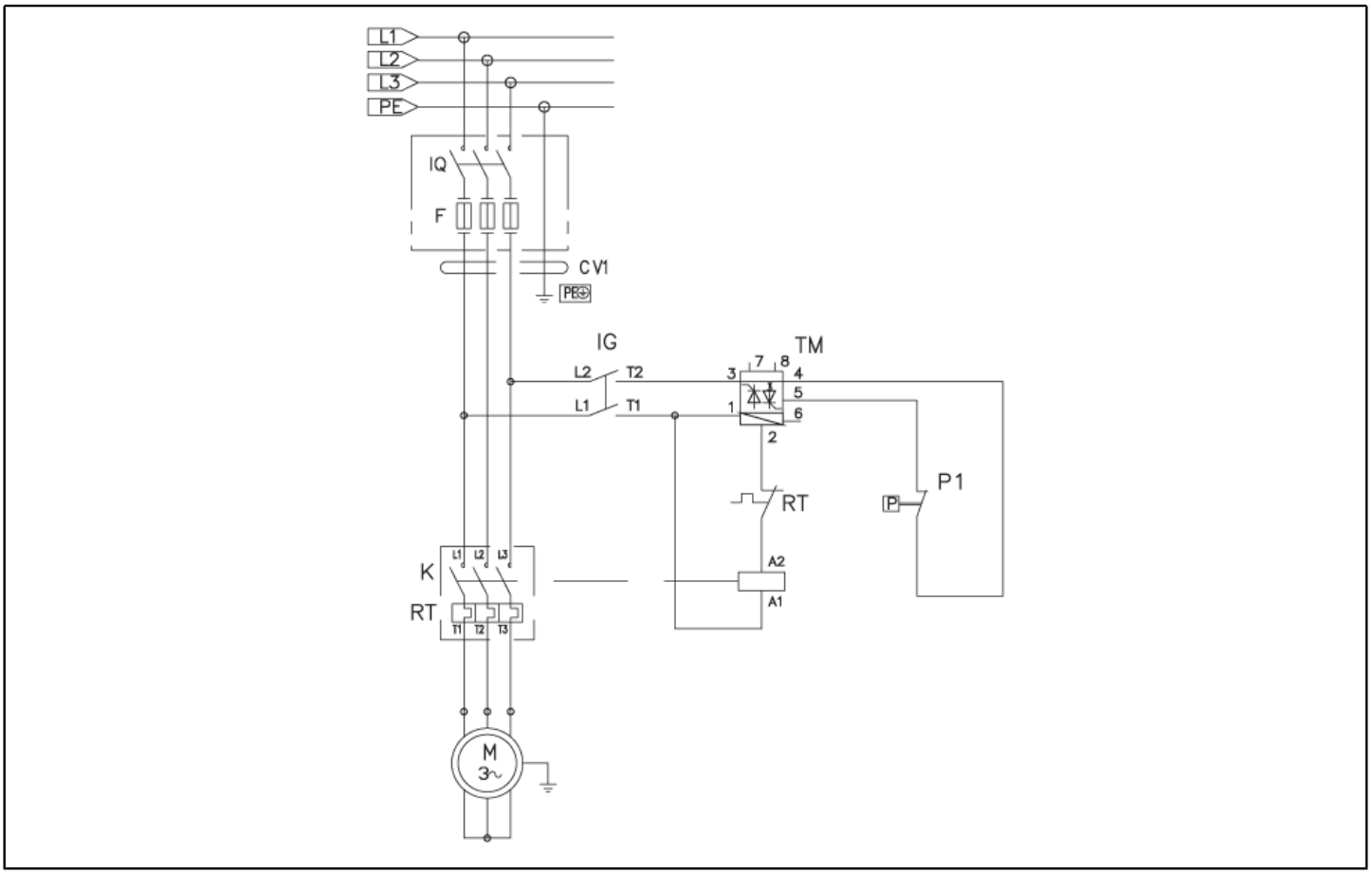

Ref. K	Part n.	Part n. 2	Description	Quantity	Validity From	Validity To	Price
K	METT40048		CONTACTOR CGE CL 03A 300TU 400V 50H	1,00			--
IG	MECI40036		SWITCH BRM BP. 0-1 12A +M.0-I	1,00			--
RT	METT40050		THERMAL RELAY GE RT 1U 21.0 -26.0A	1,00			--
TM	METY40008		TIMER THV/1 400-5/60 30S.AF2.0	1,00			--
CV1	MECB89887		CABLE H07RNF 4X4 L. 6.500	1,00			--

Table: VALVE - VVAZ86903 Progressive number: 1

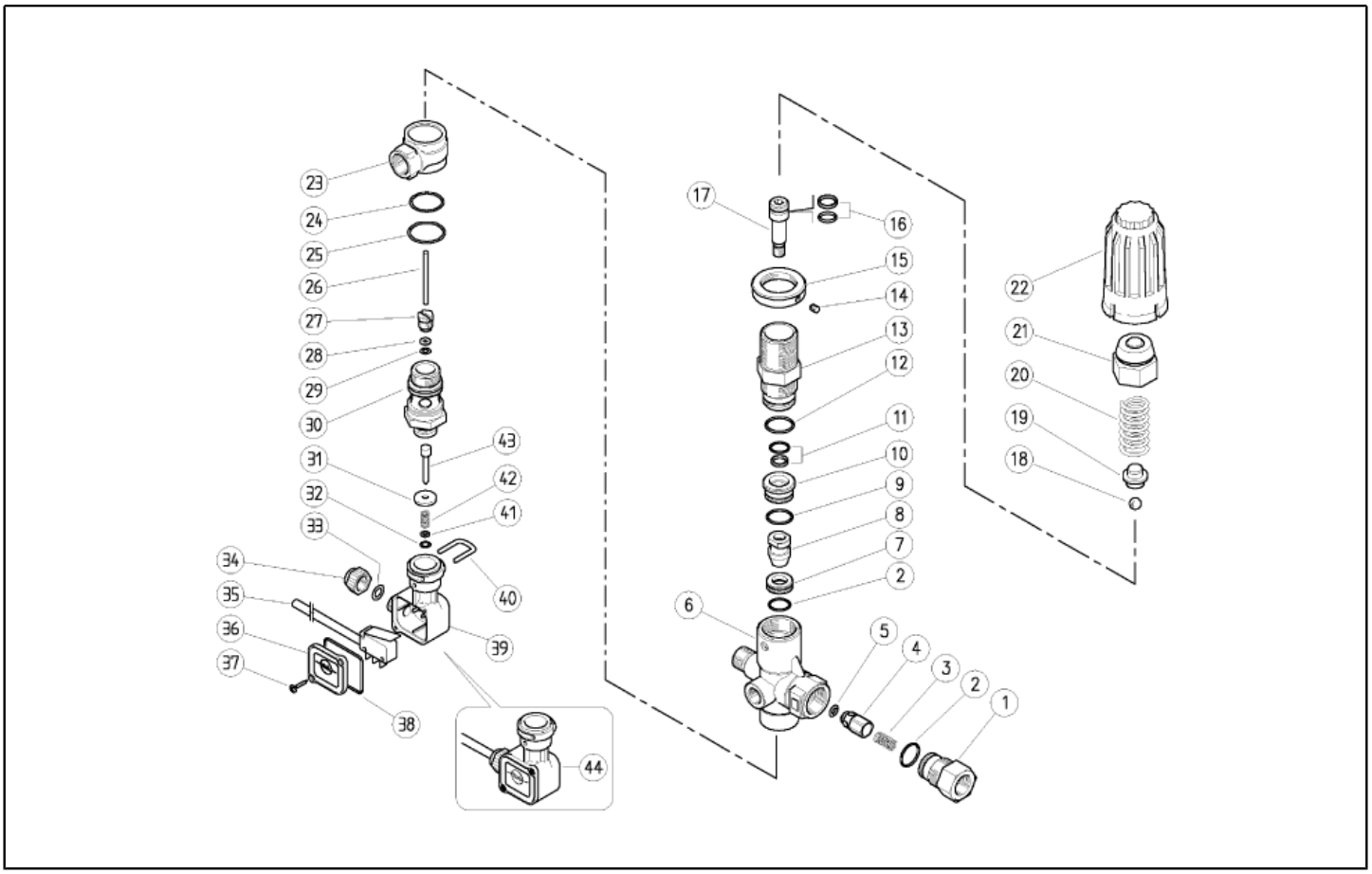

Ref.	K	Part n.	Part n. 2	Description	Quantity	Validity From	Validity To	Price
0001		PVVR40390		CONNECTOR VB350 G3/8F OT	1,00			--
0002	S	GUGO12321		O-RING D. 15.6 X 1.78 NBR 90SH	2,00			--
0003		MLML29751		SPRING VB 7	1,00			--
0004		PVVR40391		COUPLING N/RIT. VB350 IX+OR	1,00			--
0005	S	GUGO46053		O-RING D. 6 X 3 NBR 90SH	1,00			--
0006		PVVR40401		VALVE BODY V280-350/4 OT	1,00			--
0007	S	PVVR40392		PISTON SEAT VB 11.6X19X6 IX	1,00			--
0008	S	PVVR40393		PISTON VB350 M8 IX	1,00			--
0009	S	GUGO24913		O-RING D. 17.17 X 1.78 NBR 90SH	1,00			--
0010		PVVR40394		SPACER VB350 D.10.3 X23.4 OT	1,00			--
0011	S	GUVR40079		GASKET VB 10X14.9 +OR	1,00			--
0012	S	GUGO01057		O-RING D. 20.35 X 1.78 NBR 70SH	1,00			--
0013		PVVR40395		PISTON GUIDE VB350	1,00			--
0014		VTVT12488		SCREW TCEI 4X 4	1,00			--
0015		PVVR40396		RING NUT M 27X1 OT	1,00			--
0016	S	GUVR40080		GASKET VB 9X14 +OR	1,00			--
0017		PVVR40397		PUSH ROD VB350 M8 IX	1,00			--
0018	S	SFVR06779		BALL INOX 11/32	1,00			--
0019	S	PVVR40398		CAP VB350 OT.	1,00			--
0020		MLML40031		SPRING D. 4.5X15.8X47 VB	1,00			--
0021		PVVR40399		CAP VB350 OT	1,00			--
0022		PVVR40400		KNOB VB350 RD	1,00			--
0023		PVVR41503		MANIFOLD VB 9	1,00			--
0024	S	GUGO08182		O-RING D. 21.91 X 1.78 NBR 70SH	1,00			--
0025	S	GUGO19290		O-RING D. 23.52 X 1.78 NBR 70SH	1,00			--
0026		PVVR40026		CONTROL PISTON VB 350 INX	1,00			--
0027		PVVR40027		CAP M 10X1 OT. VB350	1,00			--
0028		GUVR43332		ANTI-EXTR.RING D. 3.2X 7.5	1,00			--
0029	S	GUGO21835		O-RING D. 2.84 X 2.62 VIT. 80SH	1,00			--
0030		PVVR40028		CONNECTOR VB350 G1/2M OT.	1,00			--
0031		VTRS40019		WASHER D. 4 X16 X2.5 OT	1,00			--
0032	S	GUGO01062		O-RING D. 3.69 X 1.78 NBR 70SH	1,00			--
0033	S	GUGO24916		O-RING D. 6.02 X 2.62 NBR 90SH	1,00			--
0034		MEVR10461		CABLE CLAMP PR5	1,00			--
0035		MECI41499		MICROSWITCH 6A PA	1,00			--
0036		MPVR41498		LID S.T-STOP PR5	1,00			--
0037		VTVT92473		SCREW TCB-TC 2,5X12 ZINC	2,00			--
0038	S	GUGO01941		O-RING D. 28.25 X 2.62 NBR 70SH	1,00			--
0039		MPVR41497		SHELL T-STOP PR5	1,00			--
0040		LAFN41496		PLUG "U" PR5	1,00			--
0041		VTRS17740		WASHER D. 4 X 8	1,00			--
0042		MLML11067		SPRING D. 8 X20 X1.1 INX PR5	1,00			--
0043		PVVR40029		CONTROL PISTON PR 5	1,00			--
0044		MEPF41516		PRESSURE SWITCH PR 5 40BAR	1,00			--

Table: VALVE - VVAZ86903 Progressive number: 1

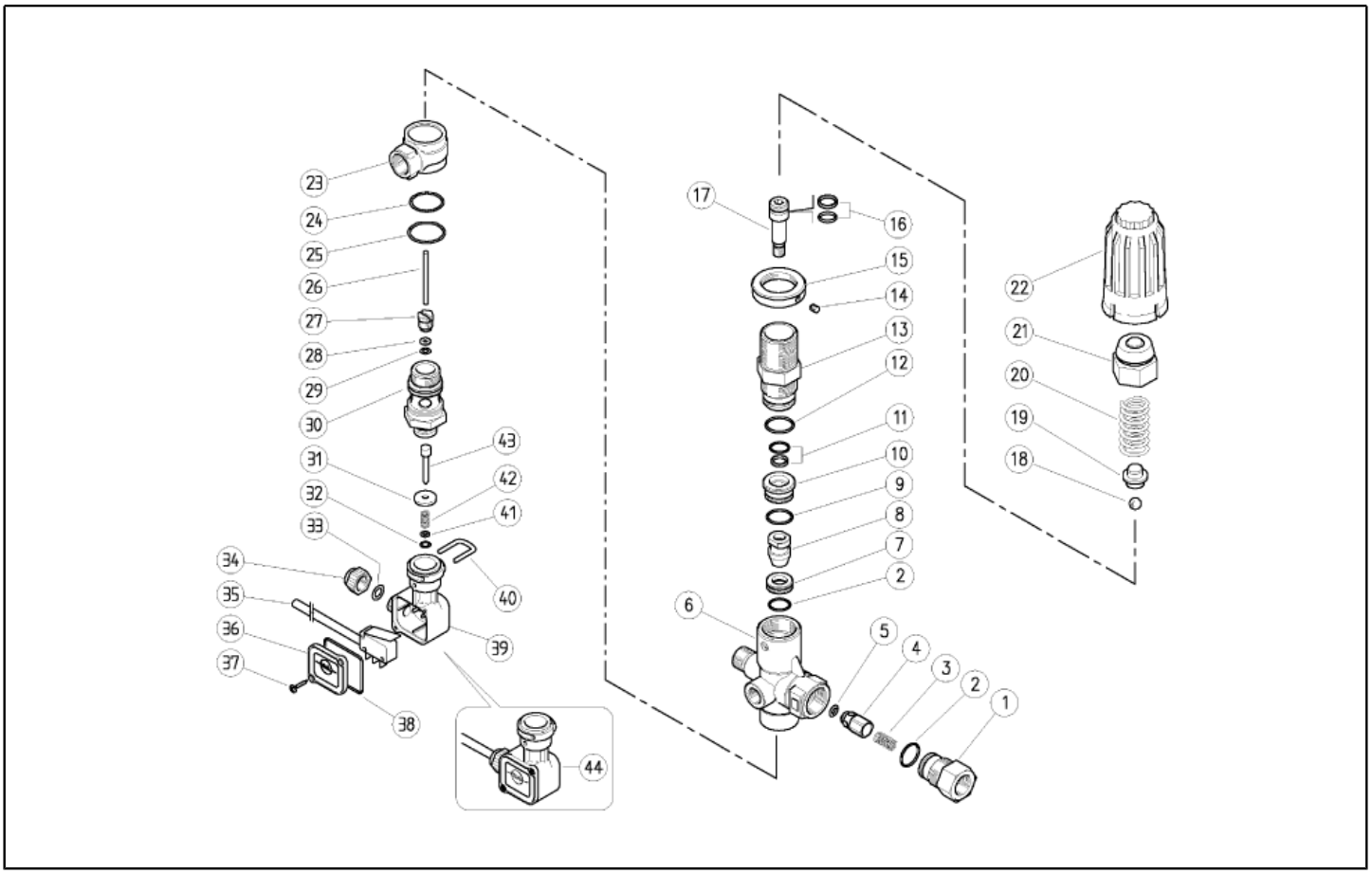

Ref.	Part n.	Part n. 2	Description	Reference	Price
	KTRI40270		KIT P 14-107 VB350 +PR 5	0002 0005 0007 0008 0009 0011 0012 0016 0018 0019 0024 0025 0029 0032 0033 0038	--

Table: PUMP - PPAP40077 Progressive number: 1

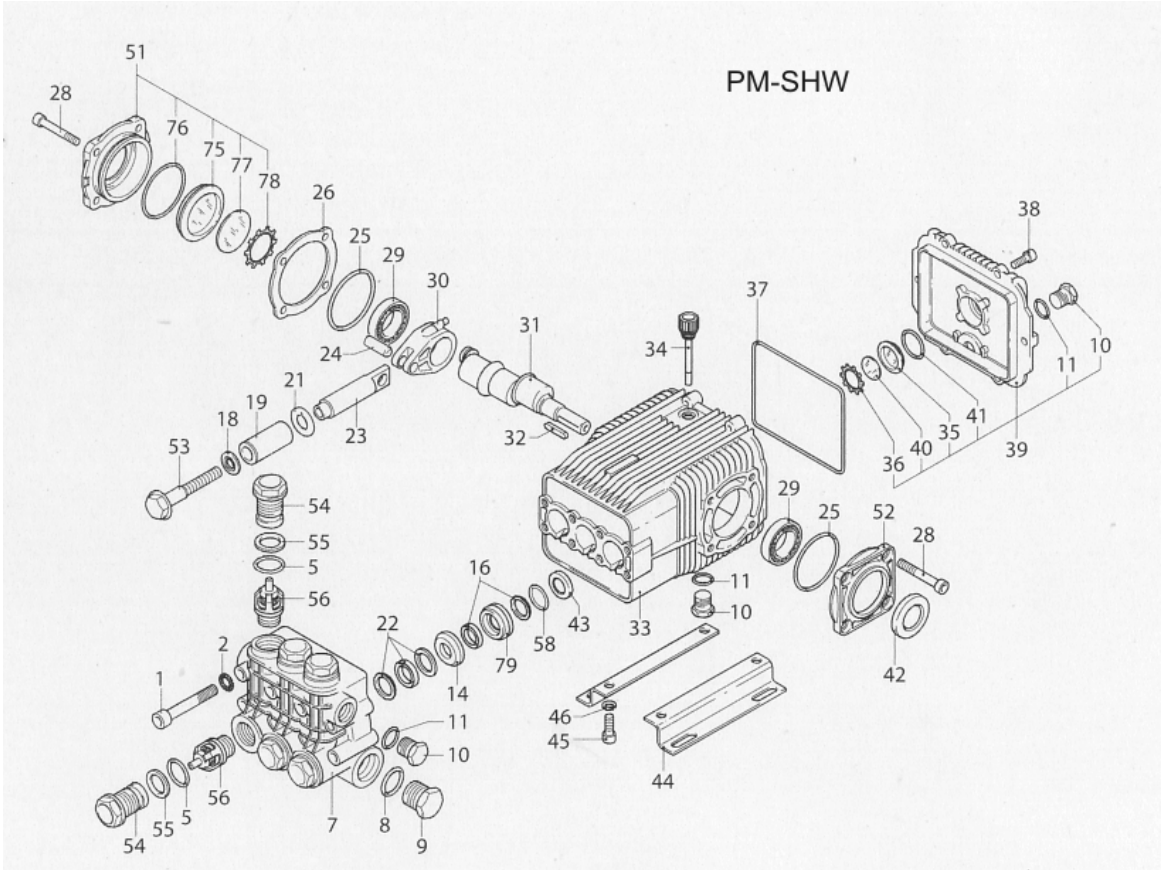

Ref.	K	Part n.	Part n. 2	Description	Quantity	Validity From	To	Price
0001		VTVT17597			8,00			--
0002		VTRS00519		WASHER D.10 DT	8,00			--
0005		GUGO02259		O-RING D. 15.54 X 2.62 NBR 70SH	3,00			--
0007		MFVR40037		HEAD AR SXW OT.	1,00			--
0008		GUGO19245		O-RING D. 17.5 X 2 NBR 70SH	1,00			--
0009		PVVR40121		CAP 1/2 M RC	1,00			--
0010		PVVR40099		CAP 3/8 M HRM	3,00			--
0011		GUGO09720		O-RING D. 14 X 1.78 NBR 70SH	3,00			--
0014	S	PVVR40206		INTERMED. RING D. 18 SHP	3,00			--
0016	S	GUVR40047		PACKING D. 18 RW W2+W3	3,00			--
0018		VTRS40011		WASHER D. 6X12X1	3,00			--
0019	S	PIVR40008		PISTON D.18 RW	3,00			--
0021		PVVR40197		DISC RW	3,00			--
0022	S	GUVR40049		PACKING D. 18 SHP W1	3,00			--
0023		PVVR40194		PISTON GUIDE RW	3,00			--
0024		PVVR40186		GUDGEON D. 14 RW	3,00			--
0025	S	GUGO01132		O-RING D. 66.35 X 2.62 NBR 70SH	2,00			--
0026		PVVR40187		THICKNESS AR 0,05 mm	1,00			--
0026		PVVR40189		THICKNESS AR 0,10 mm	1,00			--
0026		PVVR40192		THICKNESS AR 0,19 mm	1,00			--
0026		PVVR40193		THICKNESS AR 0,25 mm	1,00			--
0028		VTVT01118		SCREW TCEI M 8X16 ZC. UNI 5931	8,00			--
0029		CUVR09205		ROLLER BEARING 32206 A	2,00			--
0030		BLVR40004		CONNECTING ROD SHP	3,00			--
0031		ALMO40015		SHAFT AR SHP	1,00			--
0032		VTVR06364		KEY 8 X7 X40	1,00			--
0033		MFVR40032		PUMP CRANKCASE AR RW	1,00			--
0034		PVVR40150		OIL CAP AR SHP	1,00			--
0035		PVVR19238		OIL INDICATOR XTS	1,00			--
0036		VTAE19239		SEEGER 0,5 X25,35X16,0	1,00			--
0037	S	GUGO40020		O-RING D. 132 X 3 NBR 70SH	1,00			--
0038		VTVT01531		SCREW TE 6X 16 UNI 5739	6,00			--
0039		MFVR40034		CRANKASE COVER AR RW	1,00			--
0040		PVVR40199		DISC CONTRASTO POMPA RW	1,00			--
0041		GUGO19395		O-RING D. 20.24 X 2.62 NBR 70SH	1,00			--
0042	S	GUGO11229		OIL SEAL 30X 52X 7 NBR70	1,00			--
0043	S	GUGO40019		OIL SEAL RW	3,00			--
0051		MFVR40035		CRANKASE COVER AR RW LAT. CPL	1,00			--
0052		MFVR40033		CRANKASE COVER AR RW LAT. OPEN	1,00			--
0053		VTVT40031		SCREW TE M 6X 60 UNI 5737 A2	3,00			--
0054		PVVR40207		CAP AR SHP	3,00			--
0055		GUVR40048		ANTI-EXTR.RING D.21,5X17,6X1,5	3,00			--
0056	S	VVAM40005		VALVE UNIT SXW	6,00			--
0058	S	GUGO63438		O-RING D. 34.65 X 1.78 NBR 70SH	3,00			--

Table: PUMP - PPAP40077 Progressive number: 1

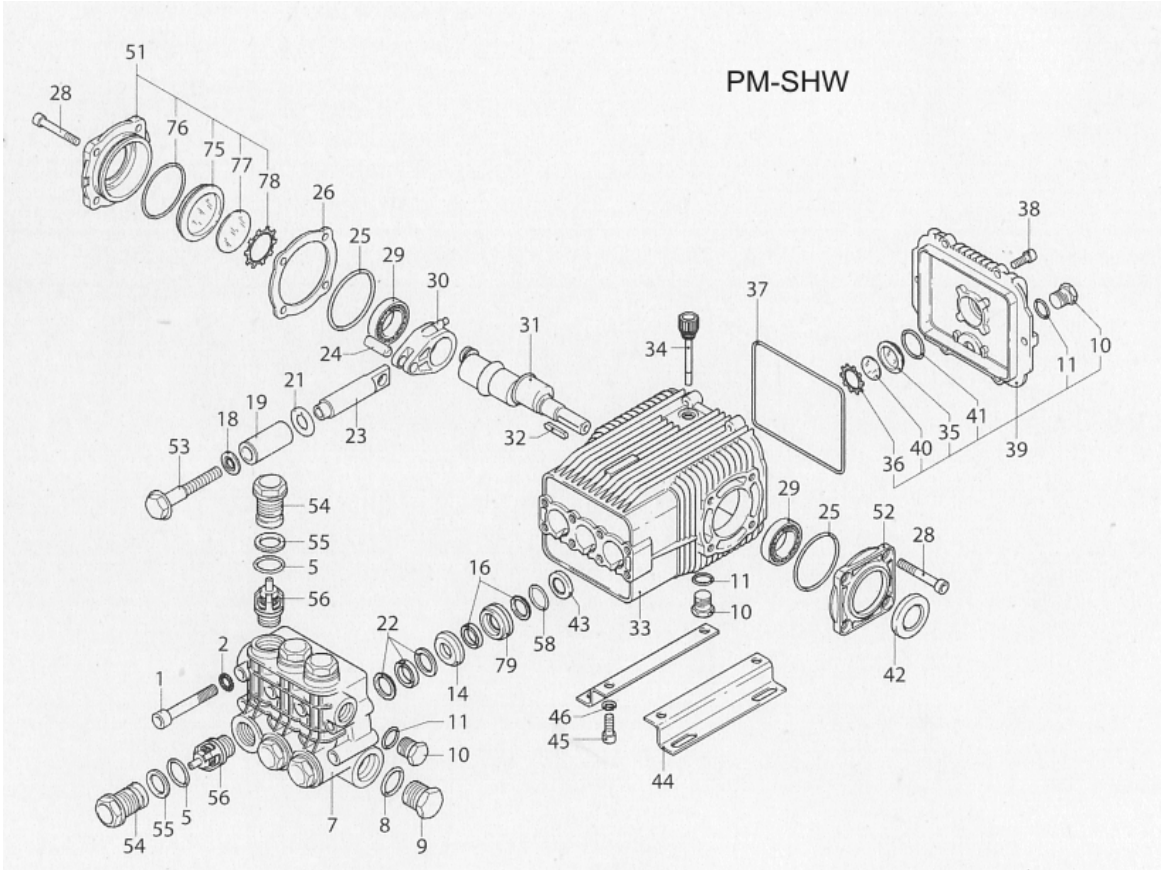

Ref.	K	Part n.	Part n. 2	Description	Quantity	Validity From	Validity To	Price
0075		PVVR40200		OIL INDICATOR RW	1,00			--
0076		GUGO01943		O-RING D. 34.6 X 2.62 NBR 70SH	1,00			--
0077		PVVR40202		DISC CONTRASTO POMPA RW	1,00			--
0078		VTAE40004		SEEGER 0,5 X40,40X30,0	1,00			--
0079	S	PVVR40185		INTERMED. RING D. 18 RW	3,00			--
0080		VTVT63067		SCREW STEI M 5X6 ZIN.UNI5923	1,00			--

Table: PUMP - PPAP40077 Progressive number: 1

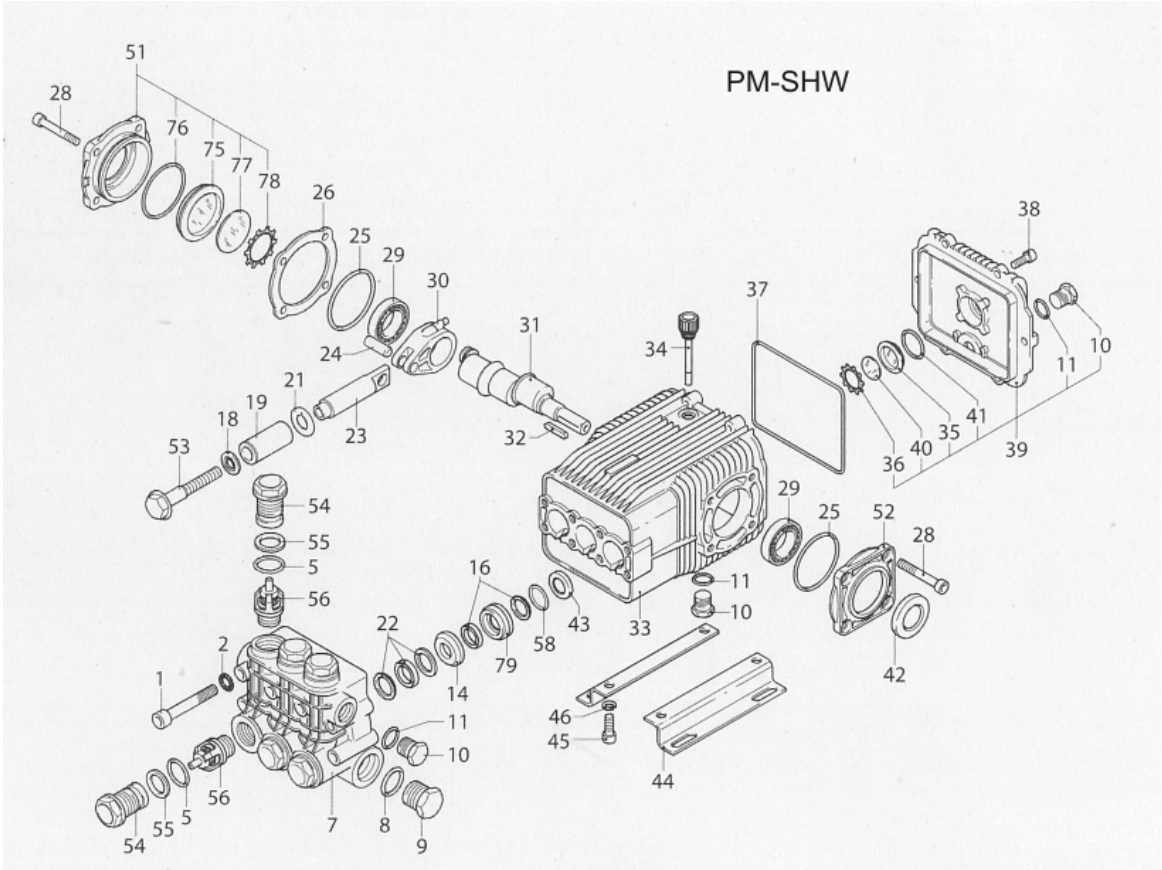

Ref.	Part n.	Part n. 2	Description	Reference	Price
K A	KTRI40165		KIT P 15-2871 SXW	0056	--
K B	KTRI40157		KIT P 15-42911 D.18 RW	0019	--
K C	KTRI40162		KIT P 15-42912 SHP	0025 0037 0042 0043	--
K E	KTRI40163		KIT P 15-42913 D.18 SHP	0016 0022 0058	--
K H	KTRI40164		KIT P 15-42120 D.18 SHP	0014 0079	--

Table: GRIP - IPIP42787 Progressive number: 1

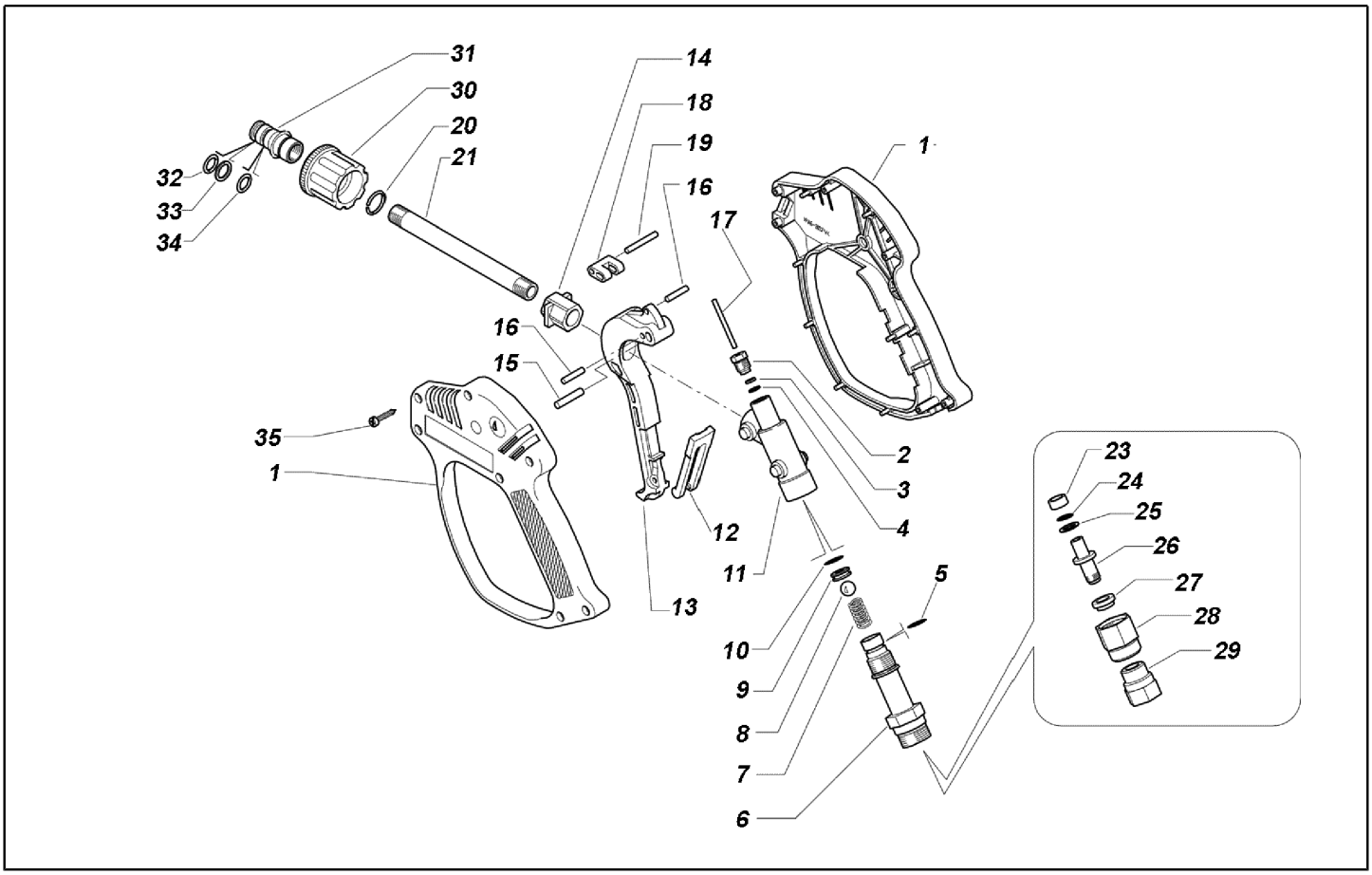

Ref.	K	Part n.	Part n. 2	Description	Quantity	Validity From	To	Price
0001		MPVR40100		BODY RL 55 2PZ.	1,00			--
0002		RCDS43331		CAP M 10X1 RL55	1,00			--
0003	S	GUVR43332		ANTI-EXTR.RING D. 3.2X 7.5	1,00			--
0004	S	GUGO17952		O-RING D. 2.84 X 2.62 NBR 70SH	1,00			--
0005	S	GUGO11652		O-RING D. 12.42 X 1.78 NBR 70SH	1,00			--
0006		PVVR40052		TUBE G 1/4" M P/SW.	1,00			--
0007		MLML43334		SPRING D.10.4X24 RL	1,00			--
0008	S	SFVR06779		BALL INOX 11/32	1,00			--
0009	S	PVVR21258		SEAT D.6	1,00			--
0010	S	GUGO19194		O-RING D. 11.11 X 1.78 NBR 70SH	1,00			--
0011		PVVR43335		GUN BODY RL55	1,00			--
0012		MPVR38722		SAFETY-DEVICE RL25	1,00			--
0013		MPVR43336		TRIGGER RL55	1,00			--
0015		VTVR43337		PIN D. 5 X 33 RL55	1,00			--
0016		VTVR07058		PLUG D. 4X20 HM	2,00			--
0017	S	PVVR43338		SMALL PISTON RL55 D. 3X38	1,00			--
0018		MPVR43339		CONNECTING ROD RL55	1,00			--
0019		VTVR43340		PIN D. 4 X 29 RL55	1,00			--
0020		VTAE40001		CIRCLIP D.16 AR4	1,00			--
0021		PVVR40051		TUBE G 1/4 RL55 2V.	1,00			--
0023		PVVR40053		BUSHING SW.RL55	1,00			--
0024		GUGO10525		O-RING D. 9.3 X 2.4 NBR 70SH	1,00			--
0025		GUVR38711		ANTI-EXTR.RING D.10.2X13.9	1,00			--
0026		PVVR40054		CENTRAL BODY SW.RL55 INX	1,00			--
0027		PVVR40055		BUSHING SW.RL55 EXT.	1,00			--
0028		PVVR40056		RING NUT SWIVEL RL55	1,00			--
0029		PVVR40057		NIPPLE SW.RL55 INX	1,00			--
0030		PVVR40050		CONNECTION M24X1,5 AR4 BL.	1,00			--
0031		PVVR40049		COUPLING G 1/4F RL55-AR4	1,00			--
0032		GUGO10525		O-RING D. 9.3 X 2.4 NBR 70SH	1,00			--
0033		GUVR38711		ANTI-EXTR.RING D.10.2X13.9	1,00			--
0034		GUGO10525		O-RING D. 9.3 X 2.4 NBR 70SH	1,00			--
0035		VTVT13234		SCREW TCB-TC 3.5X19 NIK	7,00			--

Table: GRIP - IPIP42787 Progressive number: 1

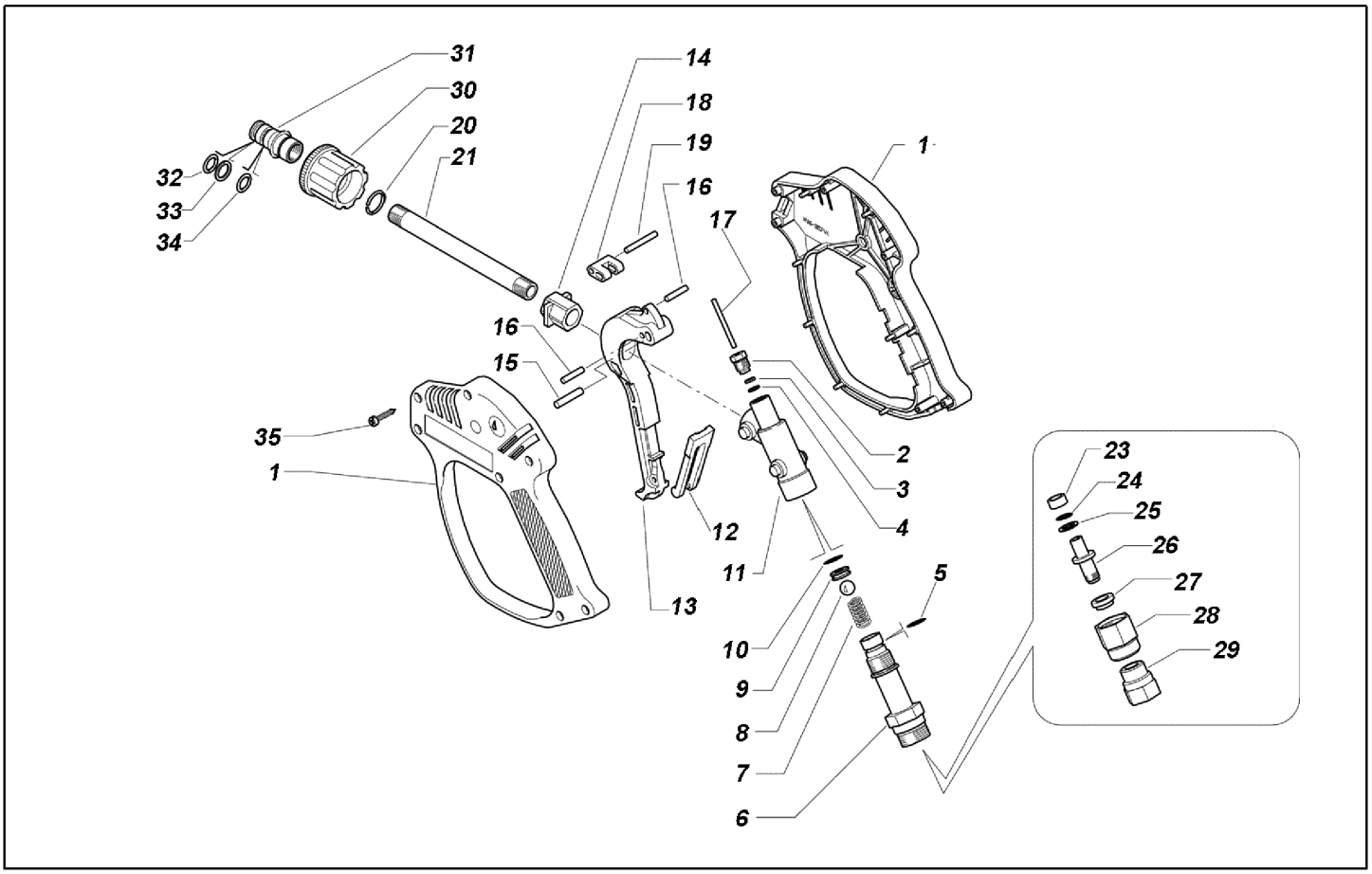

Ref.	Part n.	Part n. 2	Description	Reference	Price
	KTRI43343		KIT P 26- 18	0003 0004 0005 0008 0009 0010 0017	--